CAR STEREO

De Luxe 8 Track Tape Player

Model CS-86

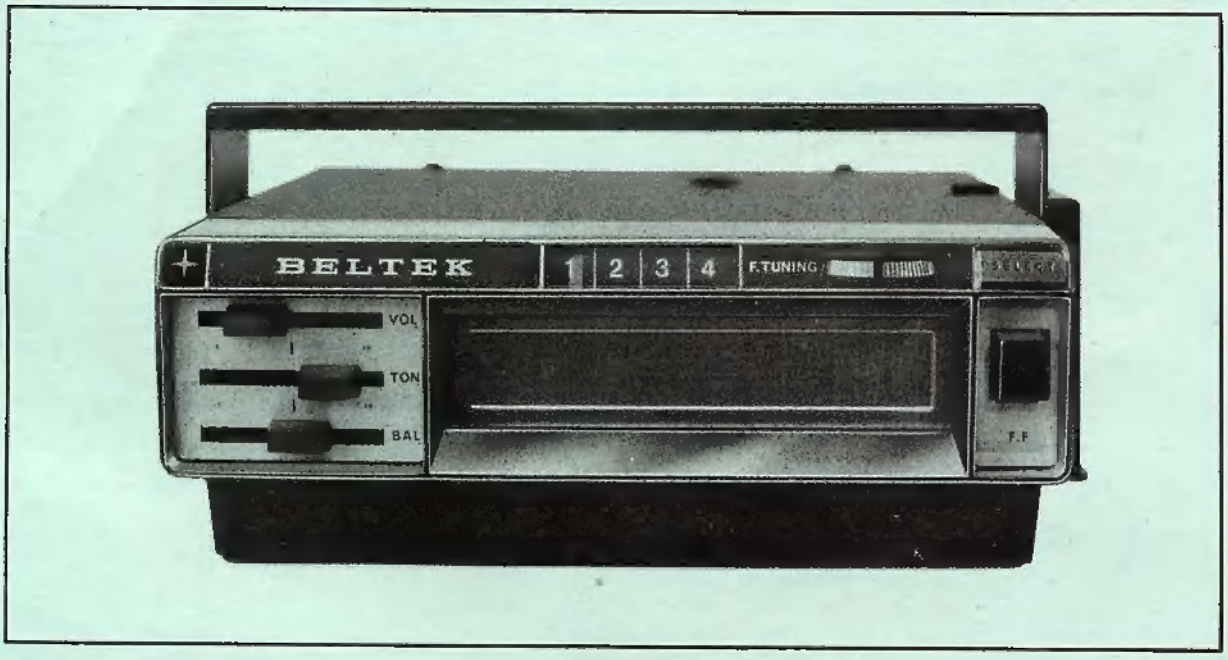

OWNER'S OPERATION AND INSTALLATION GUIDE

FAST FORWARD ATTACHED
Only one push of the button, you will find your desire program in a short time.

SLIDER CONTROL USED
Sliders are used for volume, tone and balance control. They are easy to operate and you can see playing condition at a glance.

HEAD CLEANING "O.K."
Automatically the tape head is cleaned whenever the cartridge is inserted in the unit. The tape head is always kept with the best condition.

TRACK TUNING
Your tape player is equipped with a track tuning adjustment that permits manual adjustment of the tape head alignment to imperfectly recorded tape cartridge.

PROFILE FOR SAFETY
Your tape player features all controls to present a front surface free of protruding knobs and button. This feature keeps your safety driving.

ALL SILICON TRANSISTOR USED
It is a de-luxe player that is used all silicon transistor to amplifier.

OTHER FEATURES
Remote control is available for manual changing program from rear seat.
Keylock equipment will keep the unit from robbery. Clear and easy-reading channel indicator. Whether your car is positive-ground one or negative, you can adapt the unit to your car only one touch of the polarity switch.

OPERATION

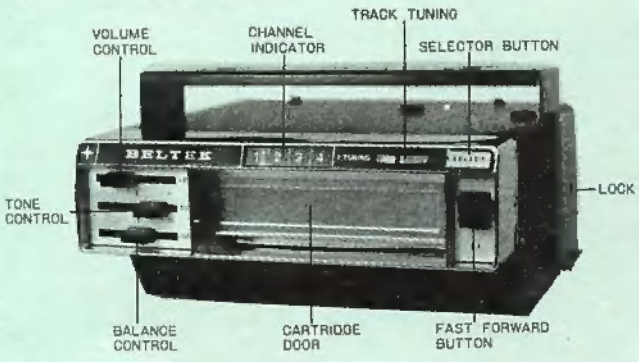

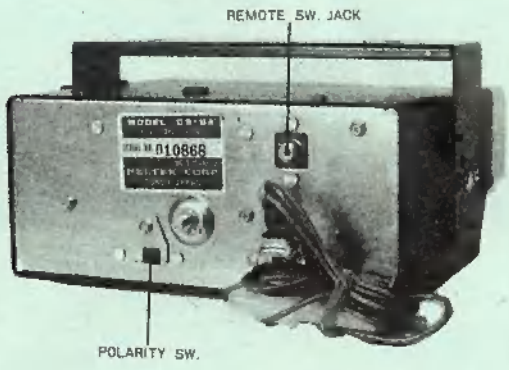

TURNING ON & OFF
Inserting the tape cartridge automatically turns the unit on. Removing the cartridge turns the unit off and rests the amplifier automatically.

ADJUSTING THE SOUND
Slide the control knobs for the desired levels of volume, tone and balance. The position of these controls shows the playing condition then.

ADJUSTING THE TRACK TUNING
To adjust the head of the tape player if "cross-talk" (two programs playing at the same time) occurs, simply move the thumbwheel knob either left or right until only one program is playing.

CHANGING PROGRAMS
To manually change programs, press the selector button or (the remote switch button which is operated even if sitting on the rear seat.) On 8 track stereo cartridge, there are four separate programs available, at each one position of the channel indicator.

FAST FORWARD MOTION
By one push of this button tape moves on quick motion forward. And when you arrive at the desired tape position, push the button again to stop the tape motion

AUTOMATIC CHANNEL SWITCHING

Your tape player will automatically change to the next channel after a complete cycle of one channel has occured, if the feature is incorporated in the cartridge.

INSTALLATION

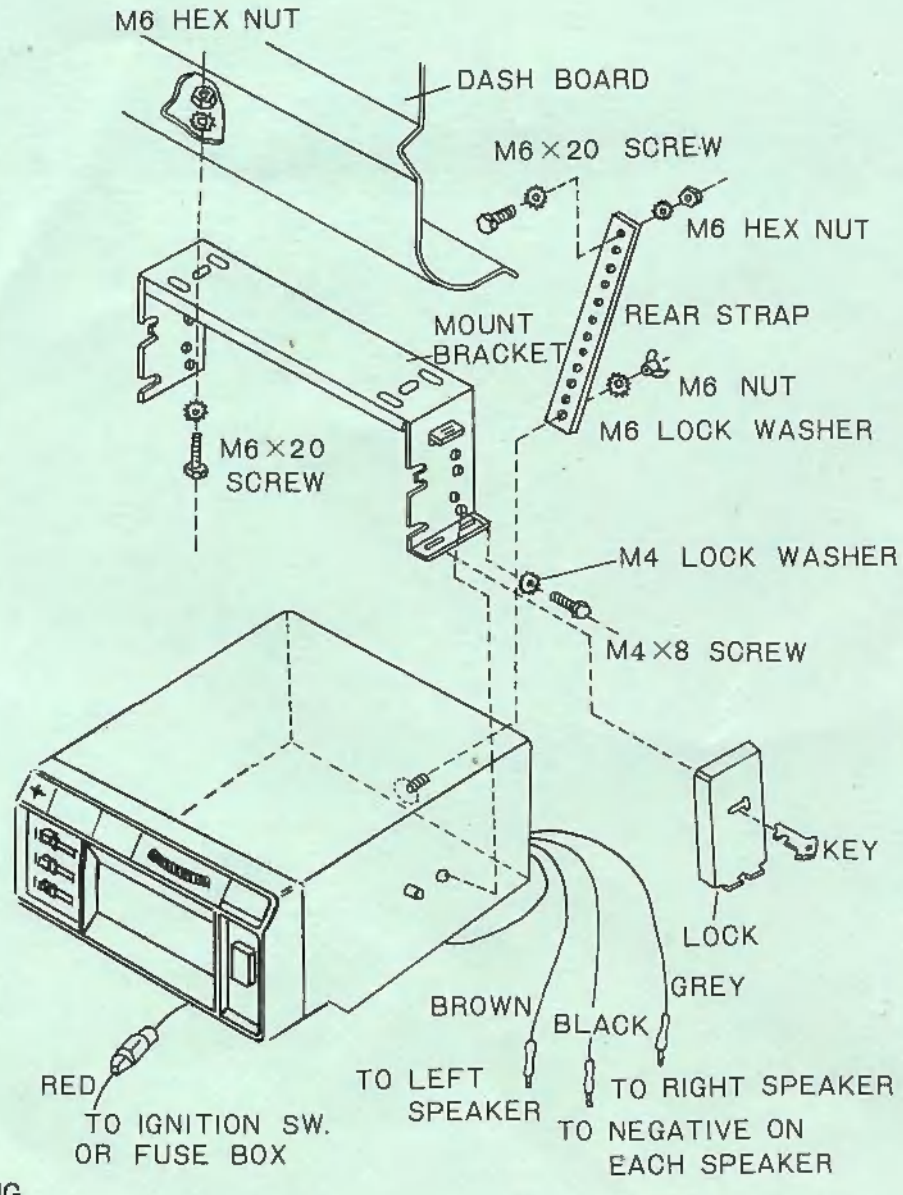

MOUNTING

Select a convenient location for your player. Position the mount bracket so player is as close to horizontal as possible. Using bracket as a template, drill two 8mm diameter holes and secure bracket. Before drilling, check other side of dash and be sure drill will not damage equipment or wiring. Attach player using hex head screws and lock washers, as shown in the installation drawing. The lock washers are needed to insure proper grounding of the player.

CAUTION : Be sure the rear strap is installed, or excessive vibrations will cause early cartridge failure and overloading of the bearings and motor in your player.

THEFT PROOF

Finally lock the unit to the mount bracket as shown. Your tape player will be kept against robbery.

LEAD CONNECTING

Red power lead connects to hot side of electrical system, usualy at the fuse block. Speaker leads connect exactly as shown. Do not connect to the frame of the car or to any other electrical system in the car, such as a radio, reverberator, multiplex, etc.

SPEAKER INSTALLATION

Follow instructions packaged with the speaker system.

POLARITY SWITCH

Before proceeding with installation, be sure polarity switch is properly positioned to agree with the electrical system of your car.

MAINTENANCE

CLEANING

Sometimes clean the capstan, tape head, tape guide and sensing head surfaces using an applicator bound soft cloth moistened with an alcohl solution opening the cartridge door. If possible, after cleaning, apply one drop of light oil to capstan bearing. Take care of no flowing the oil out.

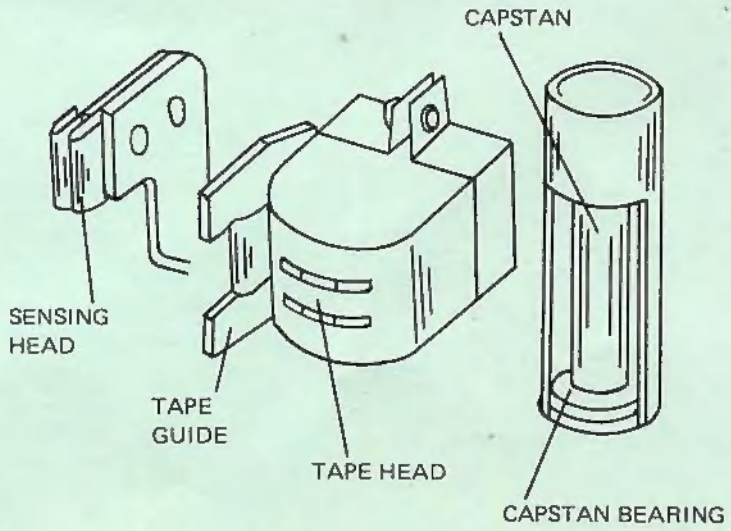

PRESERVATION

Always preserve and play cartridges except next conditions :
In direct sunlight.
Near the high temperature or magnetic fields.
In much wet and dusty areas.

NOISE SUPPRESSION

Every car may produce its own peculiar, such as ignition noise etc., causing amplifier interference which is ordinarily prevented as follows :

1) Attach a noise suppressor to the high voltage cord connecting the ignition coil and the distributor.
2) Use high tension cable resistance cord or plug cap and spark plug attached noise suppressor between the distributor and the spark plug.
3) Install a suppressor capacitor between the ignition side of the ignition coil and ground.
4) A suppressor capacitor may also be connected to the generator of voltage regulator terminal. Be sure to connect the capacitor lead to the armature terminal and not to the field terminal.

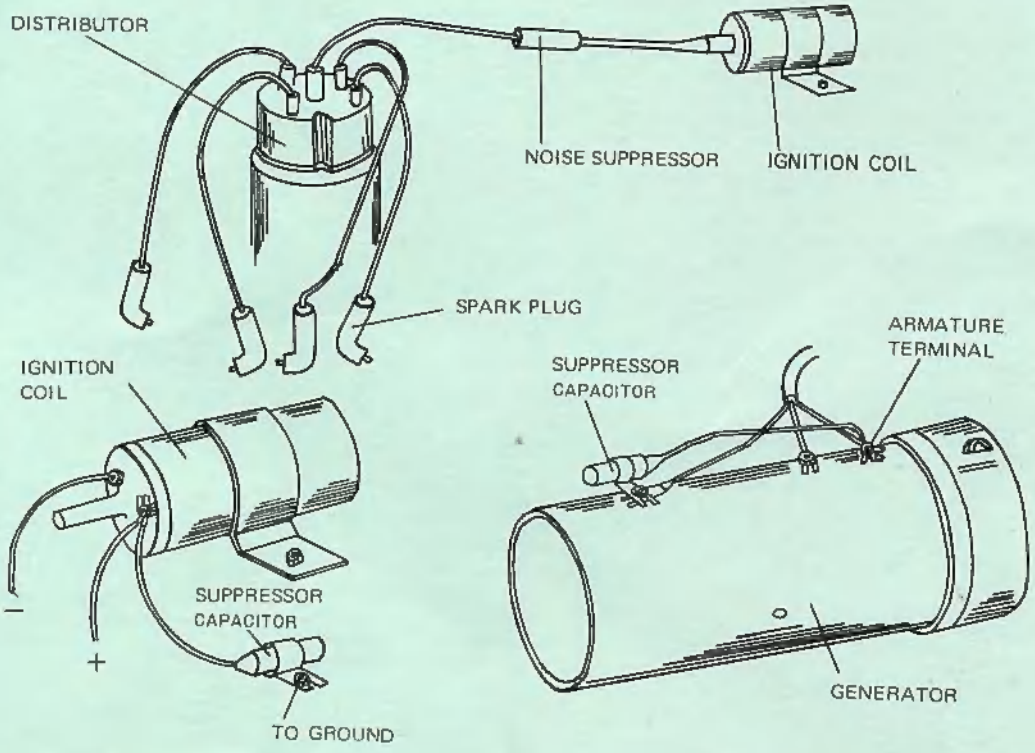

SPECIFICATIONS

Usable Cartridge	8 Track Type
Tape Speed	9.5cm/sec
Fast Forward	25cm/sec
Frequency Response	50～12,000Hz
Power Output	12W (6W×2)Max.
Qutput Impedance	4Ω each channel
Wow & Flutter	Less Than 0.25%
Number of Silicon Transistors	12
Transistor (Motor Control)	1
Varistors	5
Signal to Noise Ratio	Better Than 40dB
Power required	Tape Playing 1.7A Max. Program Selecting 2A Add.
Power Source	DC 14.4V (11～16V)
Polarity	Negative and Positive Ground
Dimensions	180 (W)×78 (H)×182 (D) mm
Weight	3kg

46-118-101-0

BELTEK CORPORATION

2-31-17 NISHI-KOJIYA, OHTA-KU, TOKYO, JAPAN
PHONE : TOKYO (03) 742-3461

Printed in Japan